Basic Terms and Definitions

Md. Manjurul Gani
Assistant Professor
Dept. of EEE, CUET

Electric Circuit

An electric circuit is an interconnection of electrical elements.

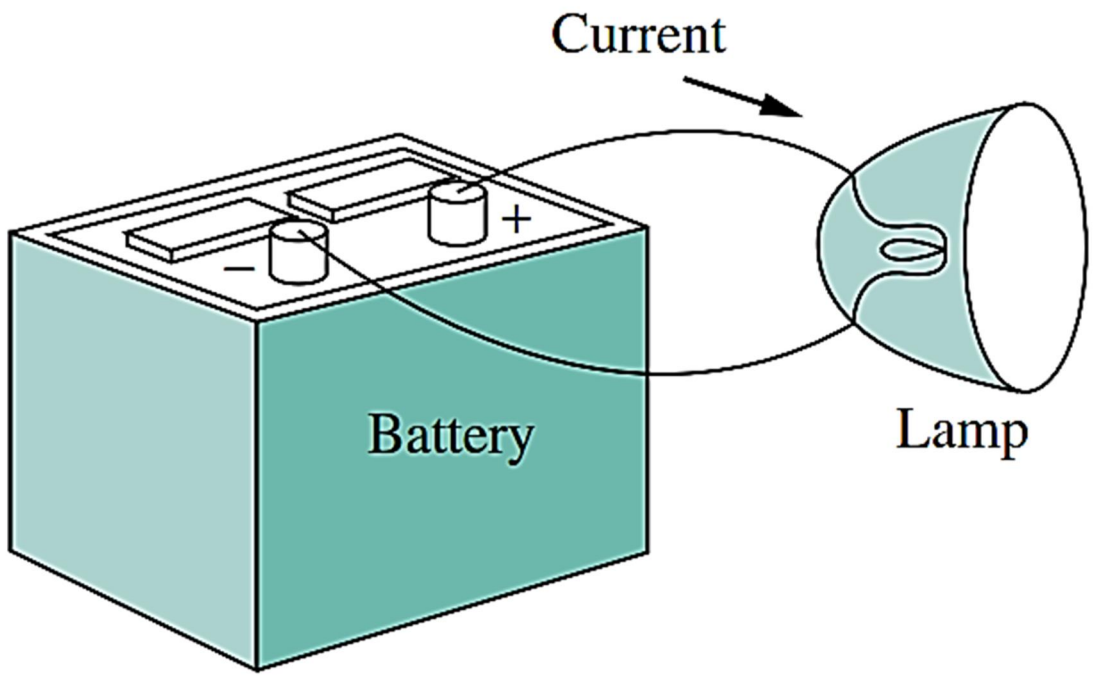

A simple electric circuit.

Charge & Current

Charge is an electrical property of the atomic particles of which matter consists, measured in coulombs (C).

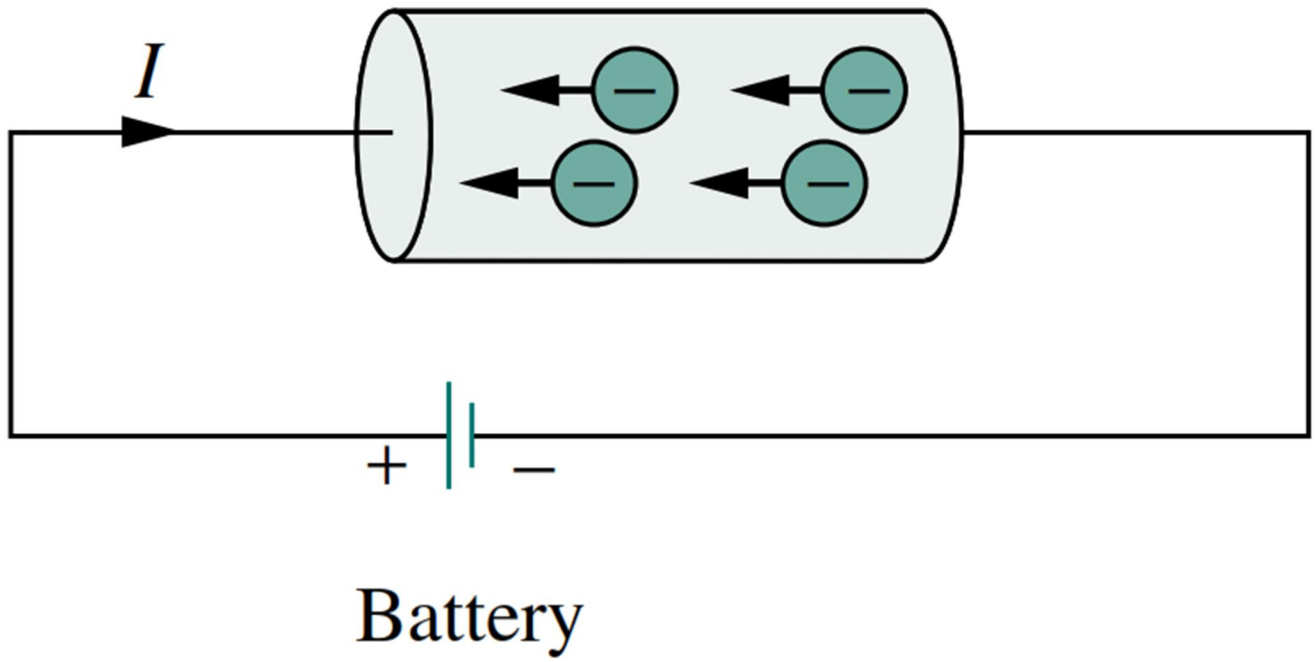

Electric current due to flow of electronic charge in a conductor.

Charge & Current

Electric current is the time rate of change of charge, measured in amperes (A).

$$i = \frac{dq}{dt}$$

$$q = \int_{t_0}^{t} i \, dt$$

Types of Current

DC Current: A direct current (dc) is a current that remains constant with time.

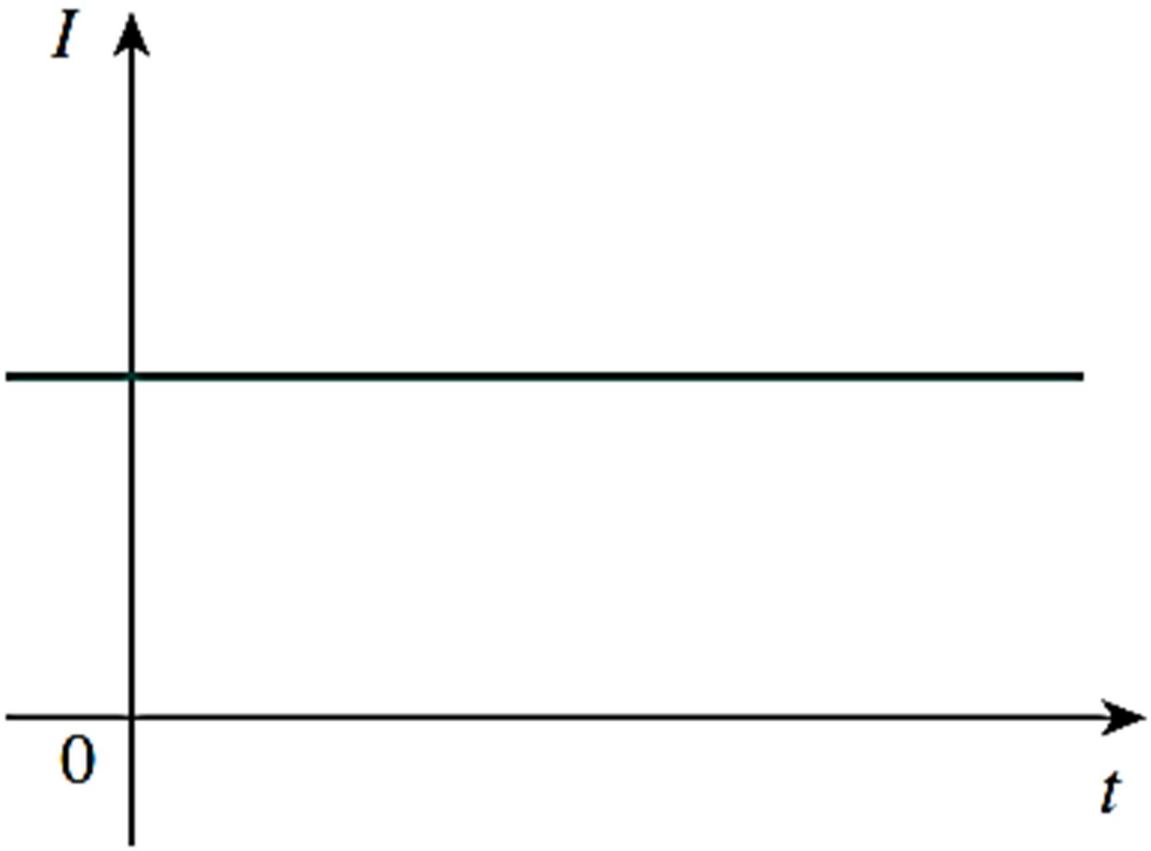

Types of Current

An alternating current (ac) is a current that varies sinusoidally with time.

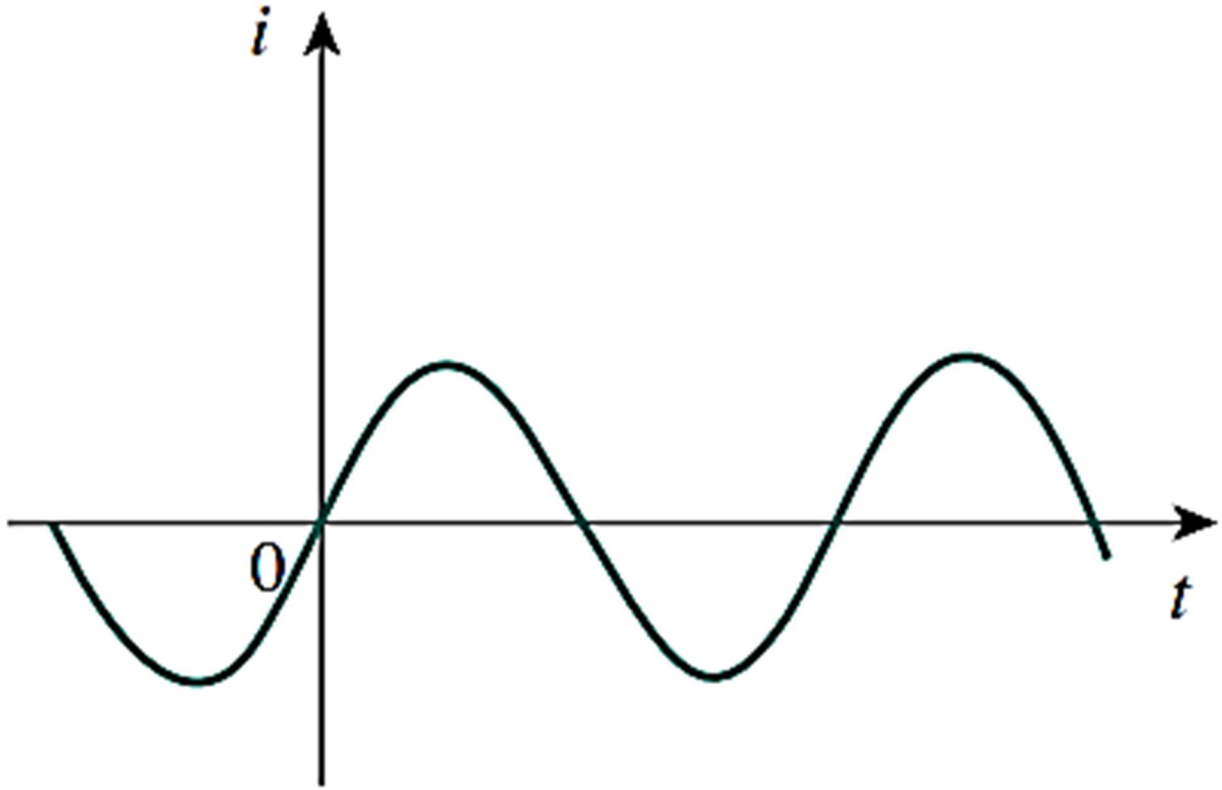

Voltage

Voltage (or potential difference) is the energy required to move a unit charge through an element, measured in volts (V).

$$v_{ab} = \frac{dw}{dq}$$

where w is energy in joules (J) and q is charge in coulombs (C). The voltage v_{ab} or simply v is measured in volts (V),

Power & Energy

Power is the time rate of expending or absorbing energy, measured in watts (W).

$$p = \frac{dw}{dt}$$

where p is power in watts (W), w is energy in joules (J), and t is time in seconds (s).

$$p = \frac{dw}{dt} = \frac{dw}{dq} \cdot \frac{dq}{dt} = vi$$

$$p = vi$$

Power & Energy

Energy is the capacity to do work, measured in joules (J).

The electric power utility companies measure energy in watt-hours (Wh),

Where, 1Wh= 3,600 J

Circuit Elements

There are **02** types of elements found in electric circuits: **passive** elements and **active** elements.

An active element is capable of **generating energy** while a passive element is not.

Examples of passive elements are **resistors, capacitors, and inductors**. Typical active elements include **generators, batteries, and operational amplifiers**.

Active Elements

The most important active elements are voltage or current sources that generally deliver power to the circuit connected to them. There are two kinds of sources: independent and dependent sources.

Independent Source

An ideal independent source is an active element that provides a specified voltage or current that is completely independent of other circuit variables.

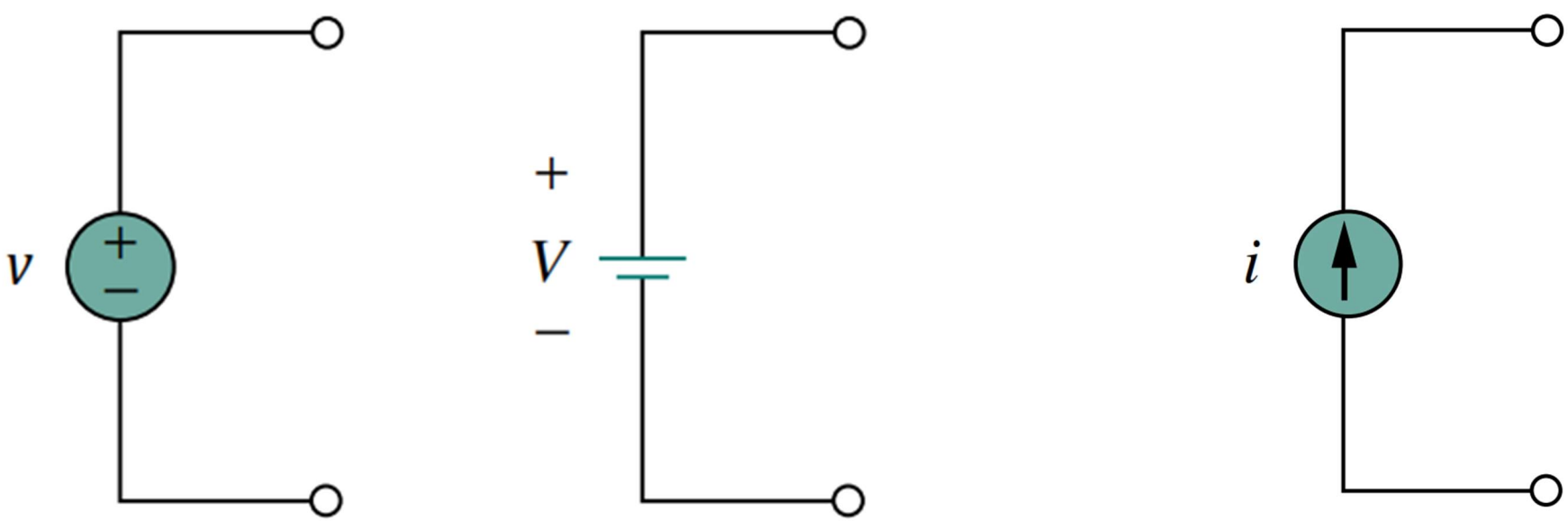

Dependent Source

An ideal dependent (or controlled) source is an active element in which the source quantity is controlled by another voltage or current.

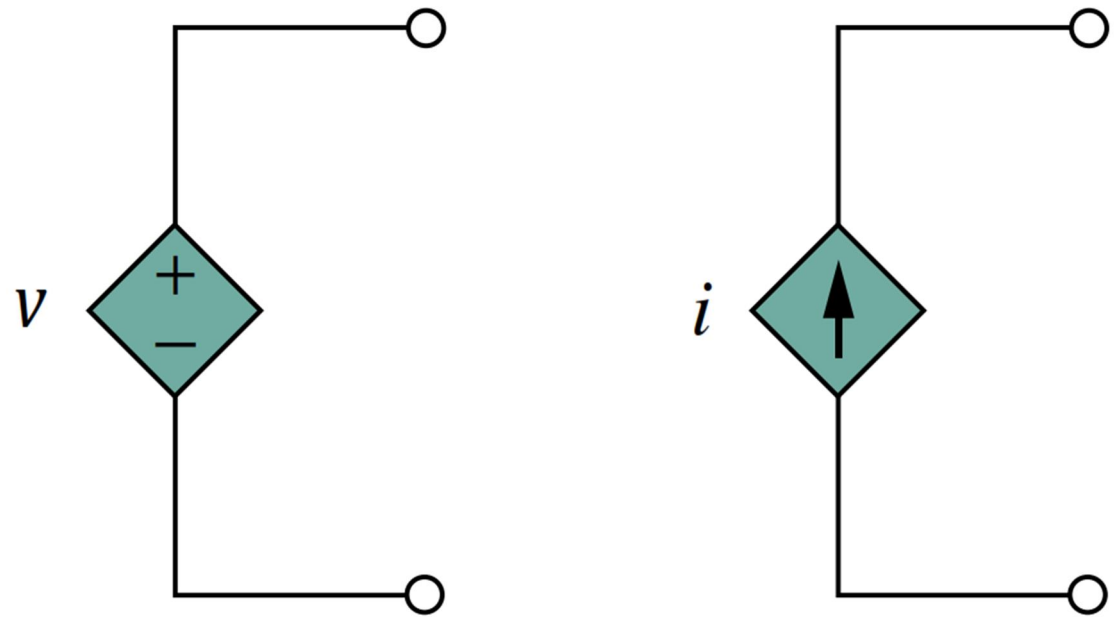

(a) (b)

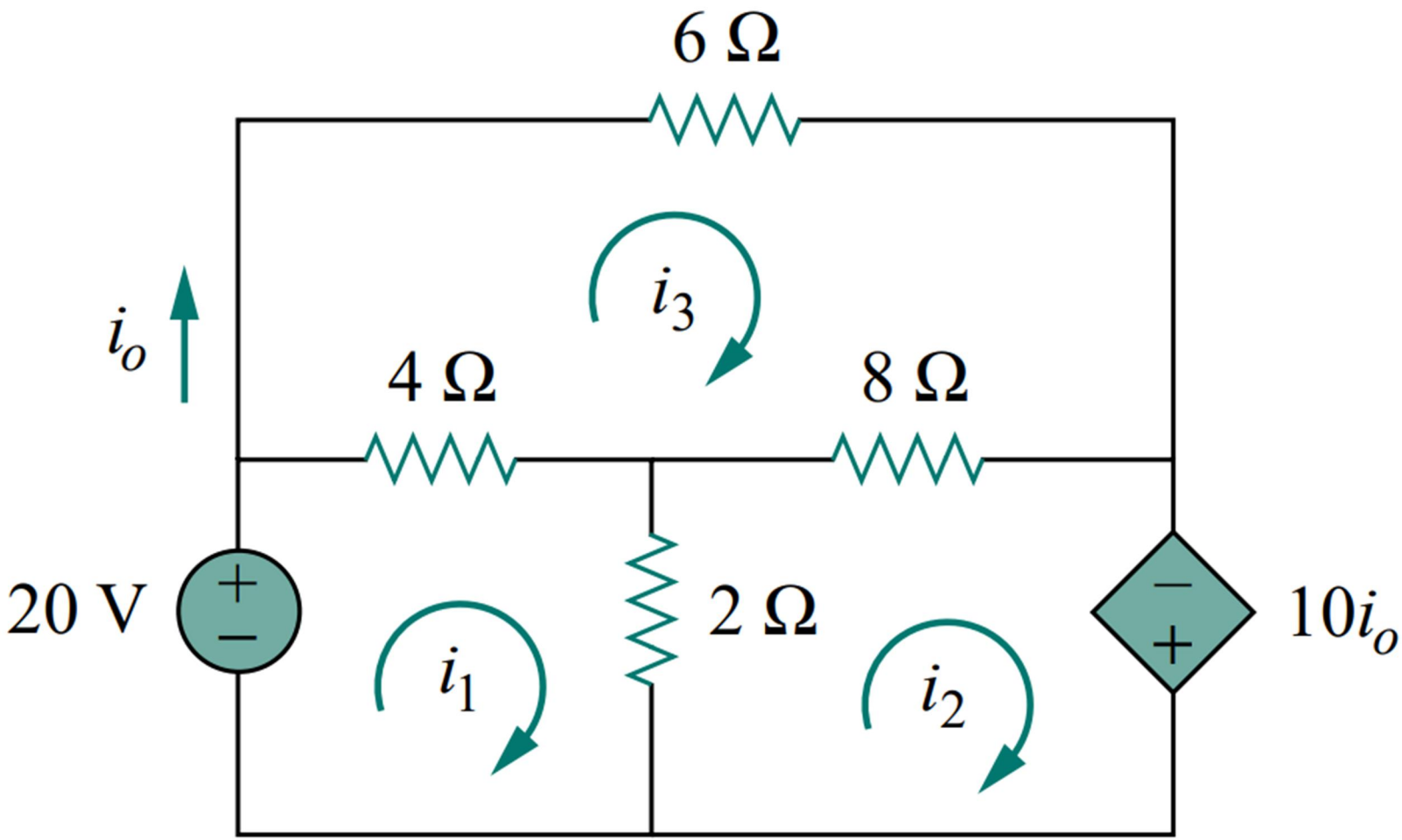
6 Ω
i_o
i_3
4 Ω
8 Ω
20 V
+
−
2 Ω
i_1
i_2
−
+
$10i_o$

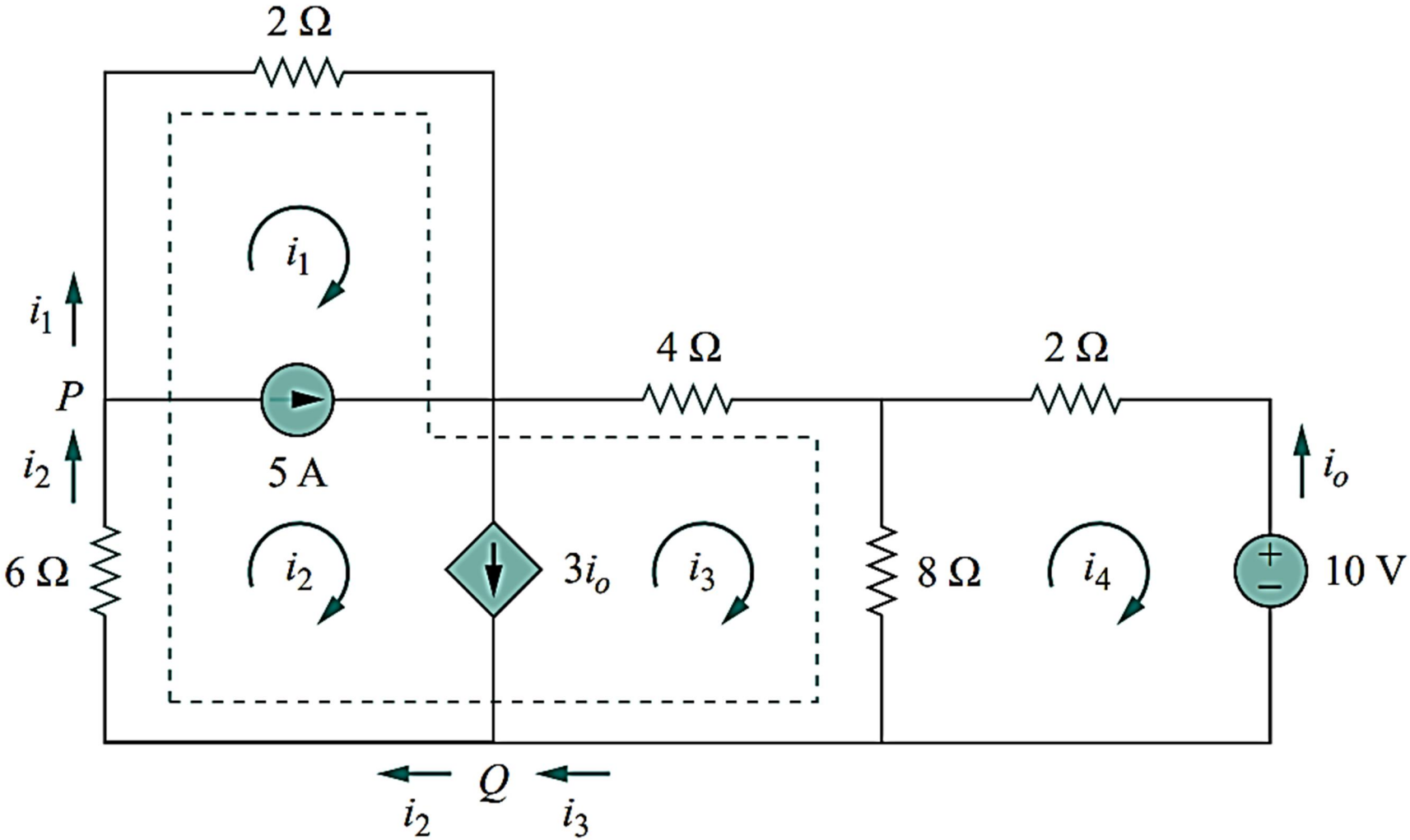
2 Ω
i_1
i_1
P
i_2
5 A
4 Ω
2 Ω
i_o
6 Ω
i_2
$3i_o$
i_3
8 Ω
i_4
10 V
Q
i_2
i_3

Q/A